30" (76.2 cm) Freestanding Electric Range

PRODUCT MODEL NUMBERS

MER8770W
MER8772W
MER8875W

Electrical: To properly install your range, you must determine the type of electrical connection you will be using and follow the instructions provided for it here.

- Range must be connected to the proper electrical voltage and frequency as specified on the model/serial number rating plate. The model/serial number rating plate is located behind the control panel or on the oven frame behind the storage drawer or warming drawer panel. Refer to the figures in the "Product Dimensions" section of the "Location Requirements" section.
- This range is manufactured with the neutral terminal connected to the cabinet. Use a 3-wire, UL listed, 40- or 50-amp power supply cord (pigtail) (see following Range Rating chart). If local codes do not permit ground through the neutral, use a 4-wire power supply cord rated at 250 volts, 40 or 50 amps and investigated for use with ranges.

Range Rating*		Specified Rating of Power Supply Cord Kit and Circuit Protection
120/240 Volts	**120/208 Volts**	**Amps**
8.8 - 16.5 KW	7.8 - 12.5 KW	40 or 50**
16.6 - 22.5 KW	12.6 - 18.5 KW	50

*The NEC calculated load is less than the total connected load listed on the model/serial rating plate.

**If connecting to a 50-amp circuit, use a 50-amp rated cord with kit. For 50-amp rated cord kits, use kits that specify use with a nominal 1⅜" (34.9 mm) diameter connection opening.

- A circuit breaker is recommended.

PRODUCT DIMENSIONS

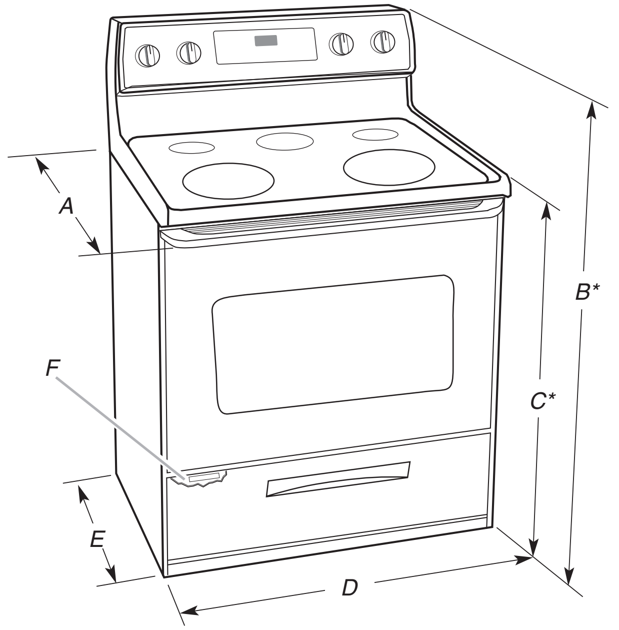

A. 28½" (72.4 cm) to 29" (73.7 cm) depth with handle to backguard standoff (depending on model)
B. 46⅝" (118.4 cm) to 47¼" (120.0 cm) overall height (depending on model)
C. 35⅝" (90.5 cm) cooktop height (minimum)
D. 29⅞" (75.9 cm) width
E. 26¾" (67.9 cm) depth to backguard standoffs
F. Model/serial rating plate (located on the left side frame behind storage or warming drawer panel)

*Range can be raised approximately 1" (2.5 cm) by adjusting the leveling legs.

CABINET OPENING DIMENSIONS

Cabinet opening dimensions shown are for 25" (64.0 cm) countertop depth, 24" (61.0 cm) base cabinet depth and 36" (91.4 cm) countertop height.

IMPORTANT: If installing a range hood or microwave hood combination above the range, follow the range hood or microwave hood combination installation instructions for dimensional clearances above the cooktop surface.

***NOTE:** 24" (61.0 cm) minimum when bottom of wood or metal cabinet is covered by not less than 1⁄4" (0.64 cm) flame retardant millboard covered with not less than No. 28 MSG sheet steel, 0.015" (0.4 mm) stainless steel, 0.024" (0.6 mm) aluminum or 0.020" (0.5 mm) copper.

30" (76.2 cm) minimum clearance between the top of the cooking platform and the bottom of an uncovered wood or metal cabinet.

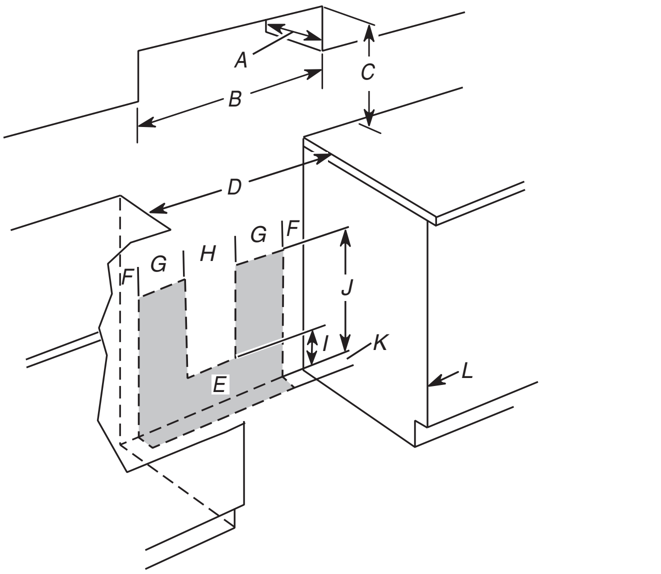

A. 13" (33.0 cm) upper cabinet depth
B. 30" (76.2 cm) min. opening width
*C. For minimum clearance to the top of the cooktop, see NOTE**
D. 30⅛" (76.5 cm) min. opening width
E. Junction box in shaded area
F. 35⁄16" (8.4 cm)
G. 7" (14.6 cm)
H. 9½" (24.1 cm)
I. 7" (14.6 cm)
J. 22" (55.9 cm)
K. 3" (7.6 cm)
L. Cabinet door or hinge should not extend into the cutout.